Dynamic load
(6 pol 50Hz) + - 2445 N at 16 Hz

Weights:
Sizer ca 2700kg
Support frame ca 320 kg

Screening surface: 5 x 2,4 m²

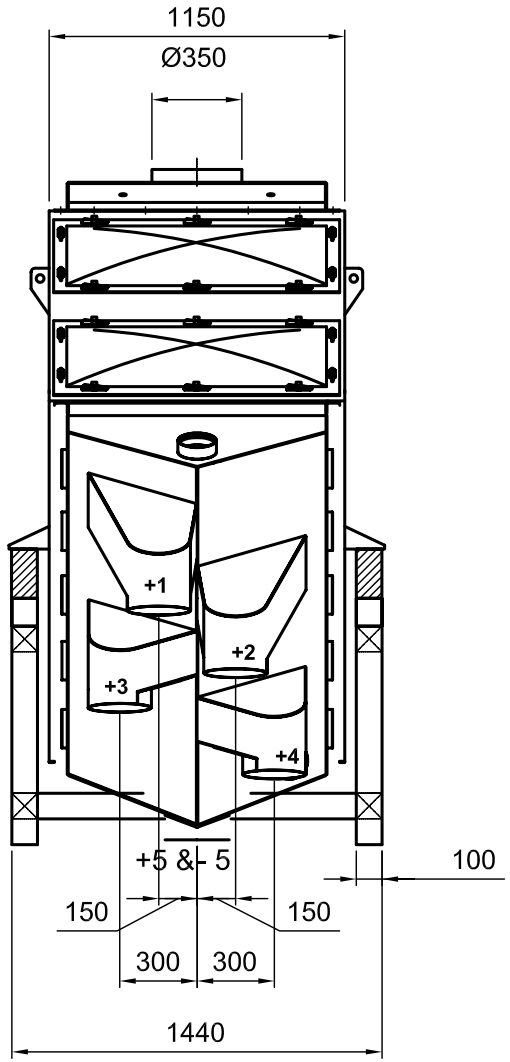

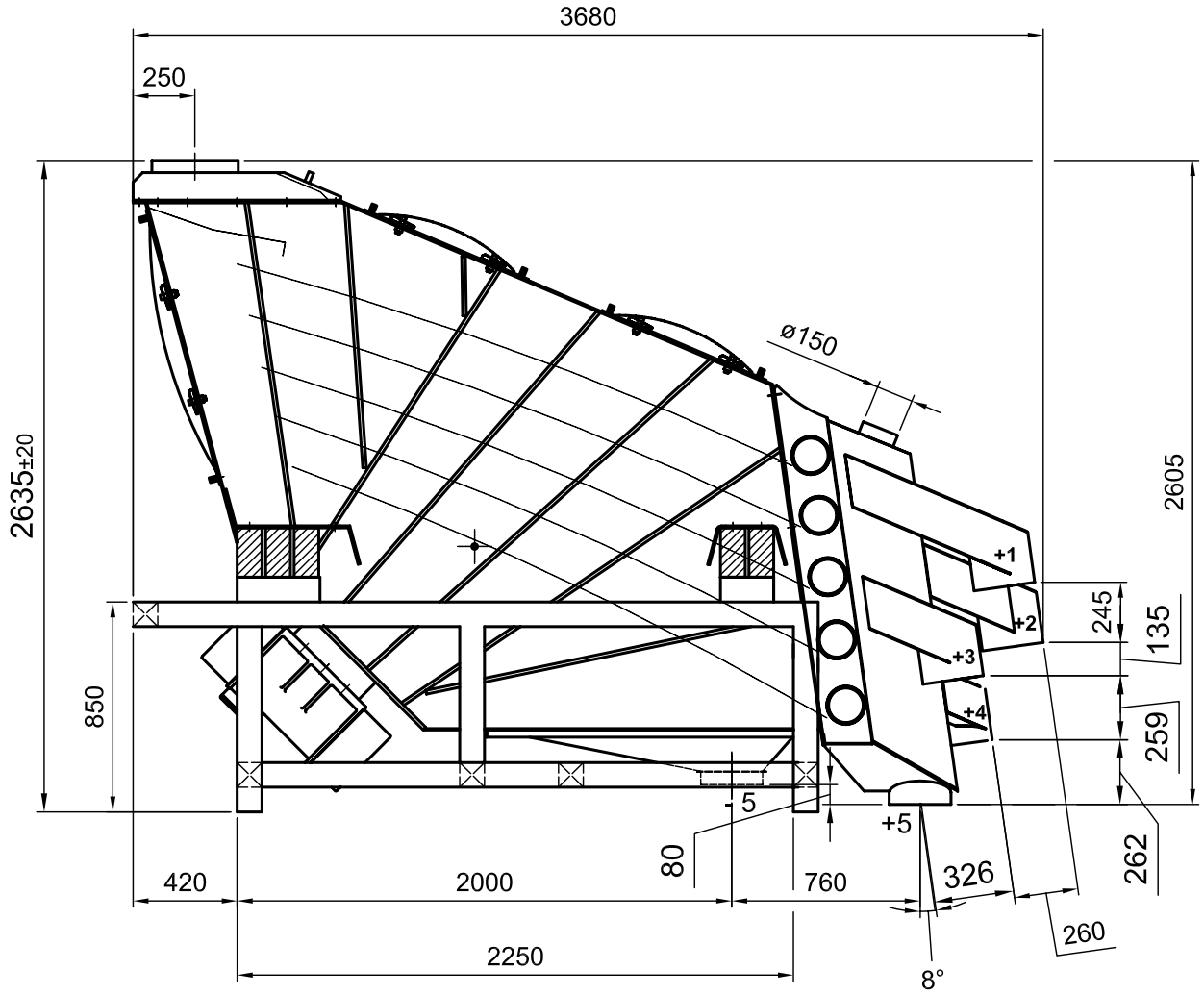

Outlets:
Ø 250mm

Nr	Ant	Ändring och/eller medd.-nr	Datum	Inf	Godk

MOGENSEN®
FREDRIK MOGENSEN AB
Hjo, SWEDEN

Mogensen Sizer
Type SEL105

Ref.	Skala 1:30	Typ SEL105
	Ritad 2004-06-18	Sign JJ / Kontr. OJ
		Nr 49476 / Rev. 0