Dynamic load
(4 pol 50Hz) + - 1075 N at 24 Hz
(6 pol 50Hz) + - 2455 N at 16 Hz

Weights:
Sizer = ~2500 kgs
Supportframe = 150 kgs

Screening surface: 4 x 2,6 m²

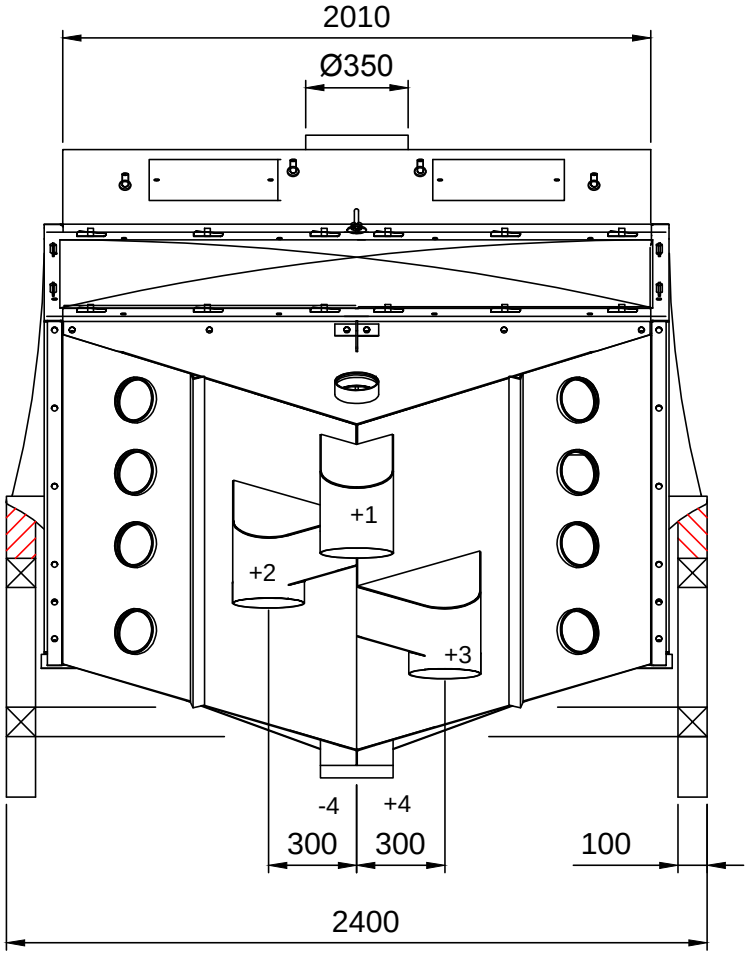

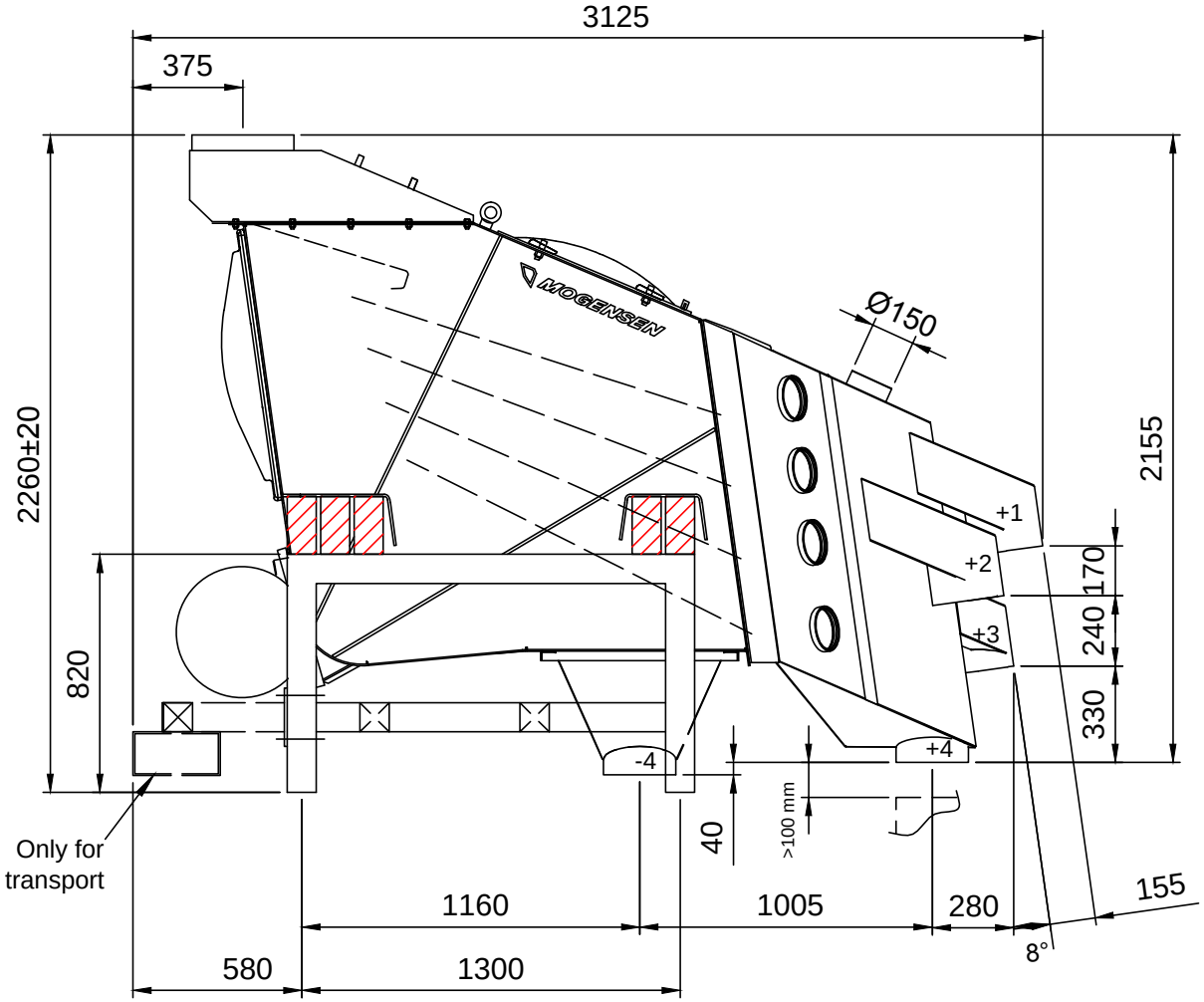

Outlets:
Ø 250 mm

Nr	Ant	Ändring och/eller medd.-nr	Datum	Inf	Godk

MOGENSEN®
FREDRIK MOGENSEN AB
Hjo, SWEDEN

Mogensen Sizer G204

Ref.	Skala 1:25	Typ G204	
	Ritad 05-04-21	Sign JJ	Kontr. OJ
		Nr 49985	Rev. 0